THE INFORMATION CONTAINED IN THIS DRAWING IS THE SOLE PROPERTY OF B-TECH INTERNATIONAL DESIGN AND MANUFACTURING LIMITED, ANY REPRODUCTION IN PART OR WHOLE WITHOUT THE WRITTEN PERMISSION OF B-TECH INTERNATIONAL DESIGN AND MANUFACTURING LIMITED IS PROHIBITED.

UniKomp.pl
Nowe Technologie IT

adres 43-200 Pszczyna , ul. Piastowska 9
tel/fax (32) 210 22 11, 3263300, 2128822
e-mail biuro@unikomp.pl
internet www.unikomp.pl

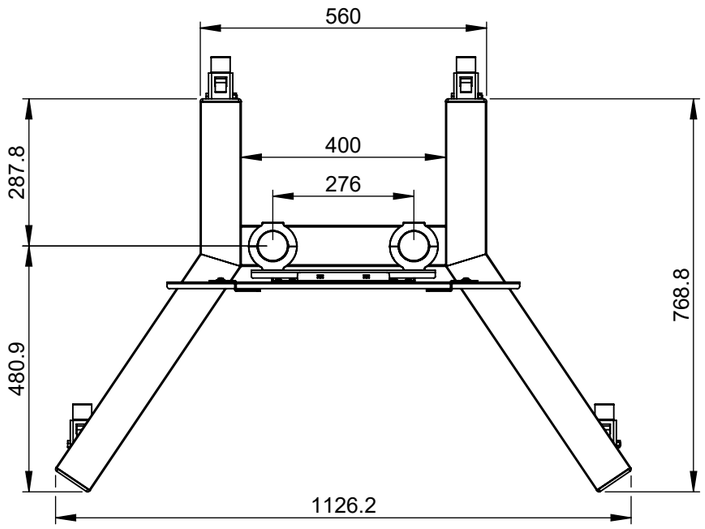

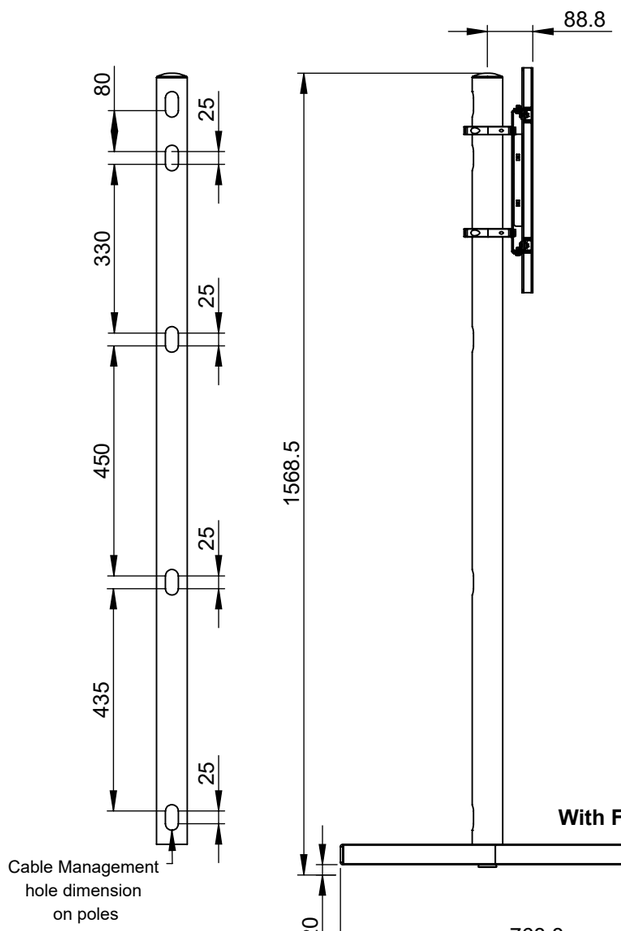

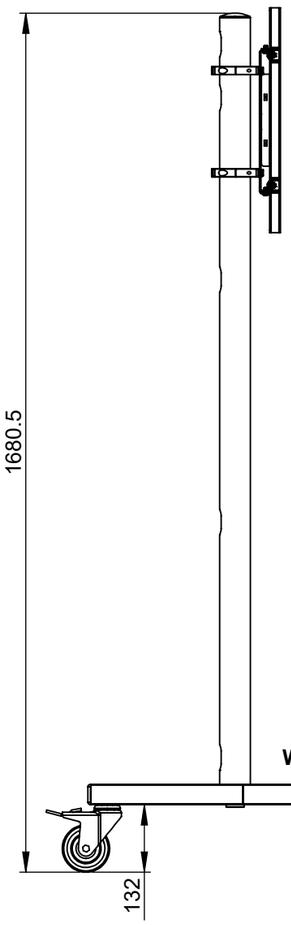

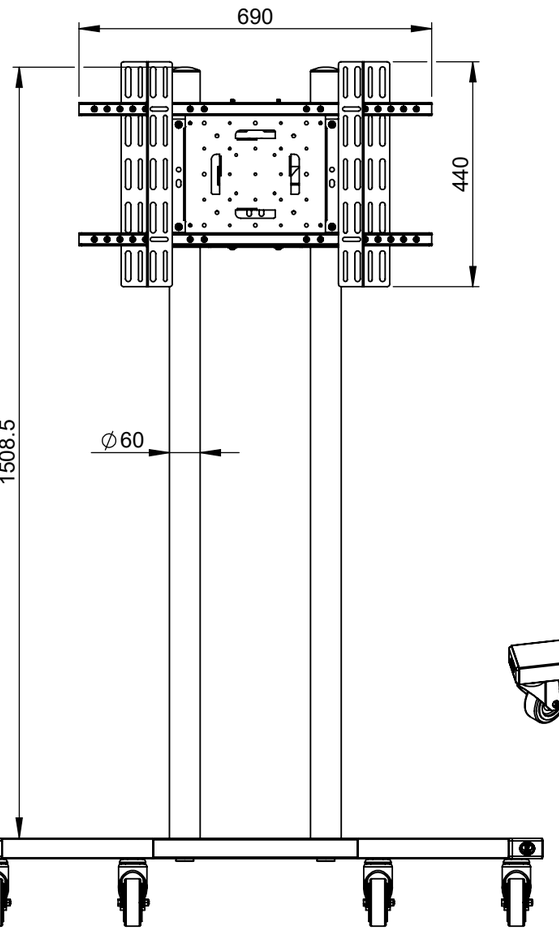

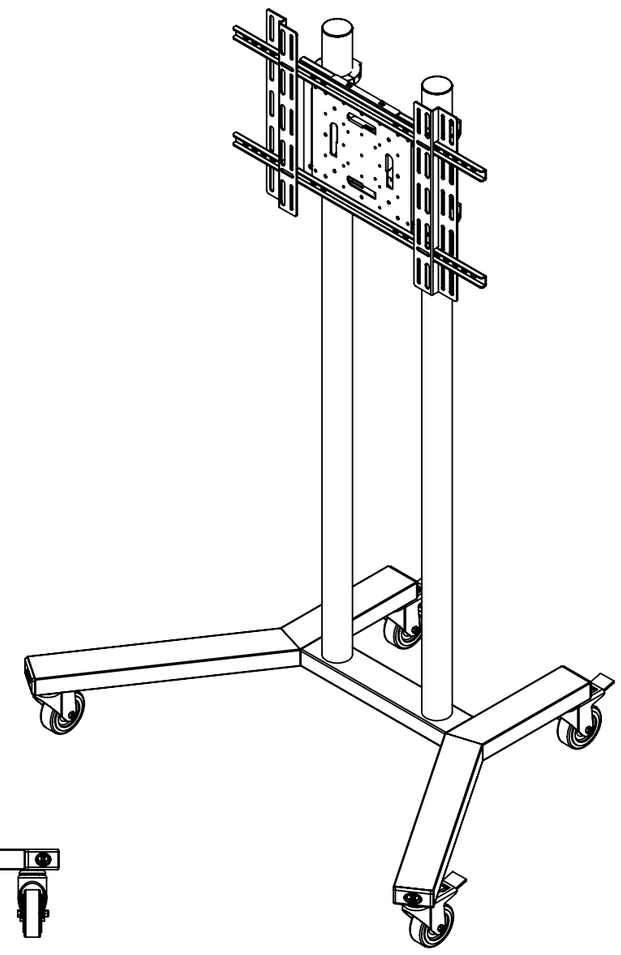

B-Tech International Design and Manufacturing Limited		**B-Tech No:**	BT8504
Part of the B-Tech International Group of Companies		**Version:**	V2.2
UNLESS OTHERWISE SPECIFIED DIMENSIONS ARE IN MILLIMETERS	**Size:** A3	**Title:**	Large Flat Screen Trolley / Stand
	Scale: 1:12	**Revision:**	0.0
Sheet: 1 of 1	**Date:** 12/09/2017	**File Name:**	BTD-BT8504-R0.0