BT8504

LARGE FLAT SCREEN TROLLEY / STAND

INSTALLATION GUIDE & PARTS LIST

This Pack Contains 1 Floor / Trolley Base

PLEASE KEEP THIS FOR FUTURE REFERENCE



FEATURES

- Designed for flat screens up to 65” (165cm) / 70kg (154lbs)
- Fits screens with VESA and non-VESA patterns up to 755mm x 410mm
- Supplied with both trolley feet and wheels
- Mounts screen in landscape or portrait style







CONTENTS

Installation Safety Notes....2
Parts List....4
Safety Instructions....6
Installation Instructions....7
Optional Accessories....17
Product Dimensions....18
B-Tech Contact Details....20

INSTALLATION TOOLS REQUIRED

Crosshead screwdriver



Hex Keys (Supplied)

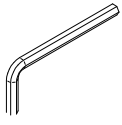

Drill (Optional)



Drill Bit (Optional)



B-TECH AUDIO VIDEO MOUNTS

www.btechavmounts.com

INSTALLATION SAFETY INSTRUCTIONS

CAUTION: This trolley / stand is intended for use only with the maximum weights indicated. Use with flat screen heavier than the maximum indicated may result in instability causing possible injury.

Do not attempt to install this product until all instructions and warnings have been read and properly understood. Please keep these instructions for future reference.
B-Tech International Limited, its distributors and dealers are not liable or responsible for damage or injury caused by improper installation, improper use or failure to observe these safety instructions. In such cases, all guarantees will expire.

General

Great care must always be taken during installation as most AV equipment is of a fragile nature, possibly heavy and easily damaged if dropped.
If you do not fully understand the instructions or are not sure how to install this product safely, then please consult a professional for advice and/or to install this product for you. Failure to mount this product correctly may cause serious injury or death both during installation and at any time thereafter.
Do not mount any AV equipment that exceeds the specific weight limit of the product you are installing. This weight limit will be clearly stated on each product and its packaging and will vary from product to product.

Product location

Please pay careful attention to where this product is located. Some locations are not suitable for installation.
If located in a public or frequently populated area ensure that the product is out of the immediate reach of people.

Fixing hardware

It is highly recommended that all fixing screws be used where supplied and that the purpose of all other fixing hardware is fully understood. In some cases more AV equipment fixing hardware will be supplied to accommodate different models of equipment and set up configurations.
The installer must be satisfied that any supplied fixing hardware is suitable for each specific installation. If any fixing screws or included hardware are deemed not sufficient for a safe installation then please consult a professional or your local hardware store.

Hazard limitation

When routing cables take advantage of any built in cable management features that the product might provide and ensure that all cables are tidy and secure. Check to see that any moving aspect of the product can do so unhindered by any cabling.
Some products have moving parts and the potential to cause injury through the crushing or trapping of fingers or other body parts.
Particular attention to the nature of moving parts is required especially when assembling installing and adjusting during set up.
Immediately after installations double-check that the work done is safe and secure. Double-check all necessary fixings are present and are of ample tightness.
It is recommended that periodic inspections of the product and its fixing points are made as frequently as possible to ensure that safety is maintained. If in doubt consult a professional AV installer or other suitably qualified person.

CS
Společnost B-Tech International Ltd. doporučuje provést instalaci tohoto produktu prostřednictvím odborného instalátora AV či jinak způsobilé osoby. Společnost B-Tech International Ltd, její distributoři a prodejci nenesou odpovědnost za škody nebo zranění způsobená nevhodnou instalací. Tento výrobek je nutno umístit do vhodné konstrukce a používat jen po uvedenou maximální výšku.

DE
B-Tech International Ltd. empfiehlt, dass dieses Produkt durch einen qualifizierten AV-Techniker oder eine andere Person mit geeigneter Qualifikation installiert wird. B-Tech International Ltd, ihre Distributoren und Händler können nicht für durch fehlerhafte Montage verursachte Beschädigung oder Verletzung haftbar bzw. verantwortlich gemacht werden. Dieses Produkt muss auf eine geeignetem Untergrund montiert werden und darf nur bis zum angegebenen Höchstgewicht verwendet werden.

ES
B-Tech International Ltd. recomienda que un instalador de audio y video profesional u otra persona debidamente cualificada instalen este producto. B-Tech International Ltd, sus distribuidores y concesionarios no se hacen cargo ni se responsabilizan de ningún daño o lesión provocados por una instalación inapropiada. Este producto se debe montar en una estructura adecuada y se debe utilizar soportando solamente hasta el peso máximo indicado.

FR
B-Tech International Ltd. recommande de confier l'installation de ce produit à un installateur AV professionnel ou à une autre personne dûment qualifiée. B-Tech International Ltd, ses distributeurs et ses revendeurs ne sauraient être tenus responsables de tout dégât ou de toute blessure résultant d'une installation incorrecte. Ce produit doit être monté sur un support approprié et utilisé dans la limite du poids maximum indiqué.

IT
B-Tech International Ltd. consiglia di affidare l'installazione di questo prodotto a un installatore specializzato o ad altra persona adeguatamente qualificata. B-Tech International Ltd, i suoi distributori e rivenditori non accettano alcuna responsabilità nei riguardi di eventuali danni o infortuni causati da un'errata installazione. Questo prodotto deve essere fissato a una struttura idonea e utilizzato unicamente sino al peso massimo indicato.

NL
B-Tech International Ltd. adviseert om dit product te laten installeren door een professionele AV-installateur of andere hiervoor gekwalificeerde persoon. B-Tech International Ltd, haar distributeurs en dealers zijn niet aansprakelijk of verantwoordelijk voor schade of letsel die is veroorzaakt door onoordeelkundige installatie. Dit product moet worden gemonteerd aan een geschikte constructie, waarbij het aangegeven maximum gewicht niet mag worden overschreden.

PL
Firma B-Tech International Ltd. zaleca, aby ten produkt był instalowany przez profesjonalnych instalatorów AV lub inny odpowiednio przeszkolony personel. Firma B-Tech International Ltd, jej dystrybutorzy i dealerzy nie ponoszą odpowiedzialności za uszkodzenia lub obrażenia ciała powstałe w wyniku nieprawidłowej instalacji. Niniejszy produkt musi być zamontowany na odpowiedniej powierzchni, a podczas użytkowania nie wolno przekraczać podanego maksymalnego obciążenia.

PT
A B-Tech International Ltd. recomenda que a instalação deste produto seja efectuada por um instalador de AV profissional ou outra pessoa devidamente habilitada. A B-Tech International Ltd. e os seus distribuidores e concessionários não são responsáveis por danos ou lesões causados por uma instalação incorrecta. Este produto tem de ser montado numa estrutura adequada e utilizado somente até ao peso máximo indicado.

RU
Компания B-Tech International Ltd. рекомендует, чтобы установка данного изделия производилась инженером по установке аудио-видеотехники или другим специалистом с соответствующей квалификацией. Компания B-Tech International Ltd., ее дистрибьюторы и дилеры не несут ответственности за повреждения или травмы, полученные в результате неправильной установки. Данное изделие должно

توصي بي- تك للتجارة الدولية المحدودة بأن شخص محترف فى تركيب ال AV او شخص مؤهل تأهيلا مناسبا لتركيب هذا المنتج. بي- تك للتجارة الدولية، موزعيها والتجار ليست عرضة أو مسؤولة عن الأضرار أو الإصابات الناجمة عن تركيب غير سليم، والاستخدام غير السليم أو عدم مراعاة هذه التعليمات للسلامة. يجب أن يتم تركيب هذا المنتج فى بنية مناسبة ويجب استخدامة فقط لدعم الحد الأقصى للوزن المشار إليه.

BT8504
PARTS LIST

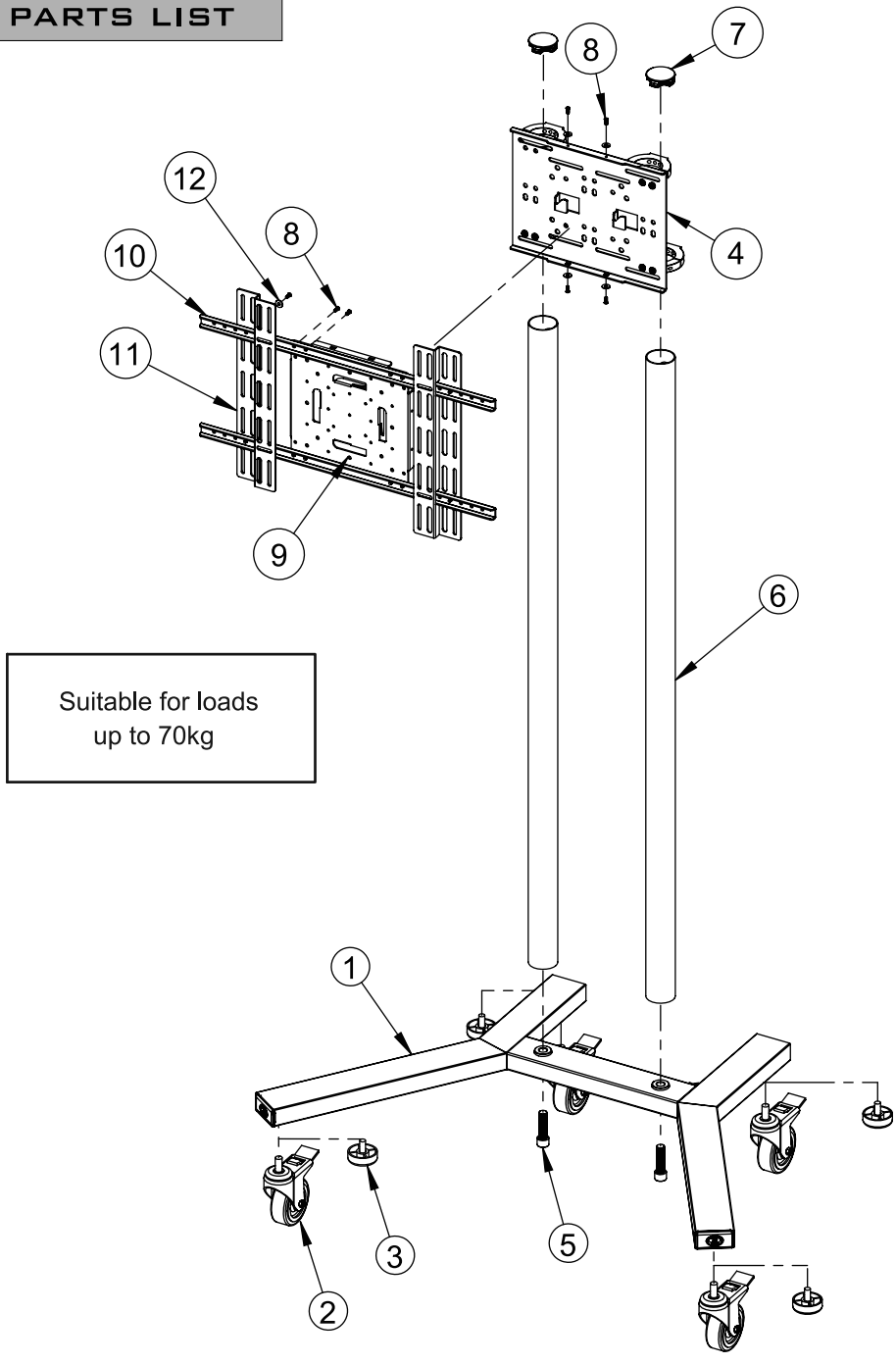

FLAT SCREEN INTERFACE KIT
(FOR ATTACHING MOUNT TO BACK OF FLAT SCREEN)

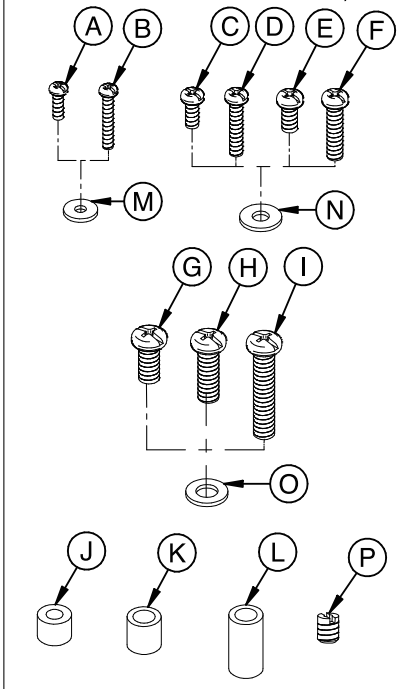

REF	PART NAME	QTY
1	TROLLEY BASE	1
2	WHEEL	4
3	LEVELLING FOOT	4
4	MOUNTING PLATE WITH COLLARS	1
5	M16 x 60 HEX BOLT	2
6	1.5m ø60mm POLE	2
7	POLE END CAP	2
8	M5 x 12mm SECURITY HEX SCREW	16
9	INTERFACE PLATE	1
10	CROSS RAIL	2
11	INTERFACE ARM	2
12	M6 METAL WASHER	8
13	4mm SECURITY HEX KEY (FOR PART 4 and 8)	1
14	14mm HEX KEY (FOR PART 5)	1
INTERFACE KIT		
A	M4 x 12mm SCREW	4
B	M4 x 25mm SCREW	4
C	M5 x 16mm SCREW	4
D	M5 x 25mm SCREW	4
E	M6 x 16mm SCREW	4
F	M6 x 25mm SCREW	4
G	M8 x 16mm SCREW	4
H	M8 x 25mm SCREW	4
I	M8 x 40mm SCREW	4
J	M6 x 12mm SPACER (FOR PARTS B, D & F)	4
K	M8 x 13mm SPACER (FOR PART H)	4
L	M8 x 24mm SPACER (FOR PART I)	4
M	M4 METAL WASHER (FOR PARTS A & B)	4
N	M6 METAL WASHER (FOR PARTS C, D, E & F)	4
O	M8 METAL WASHER (FOR PARTS G, H & I)	8
P	M8 TO M4 ADAPTOR	4

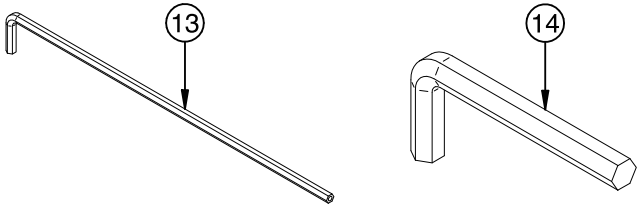

PLEASE KEEP THIS FOR FUTURE REFERENCE

WARNING

CAN TIP OVER WHICH MAY LEAD TO SERIOUS INJURY.
DO NOT ALLOW CHILDREN UNDER 16 TO MOVE TROLLEY.
MOVE TROLLEY SLOWLY

ALWAYS APPLY BRAKES WHEN TROLLEY IS STATIONARY
RELEASE BRAKES WHEN PUSHING TROLLEY.

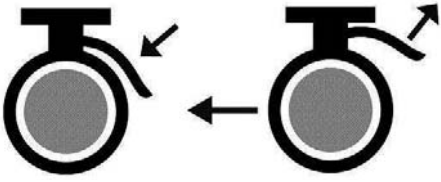

NEVER LEAVE TROLLEY ON AN INCLINE.
ALWAYS PARK ON LEVEL GROUND

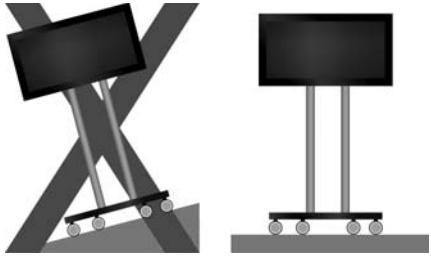

ONLY ADULTS SHOULD PUSH THIS TROLLEY

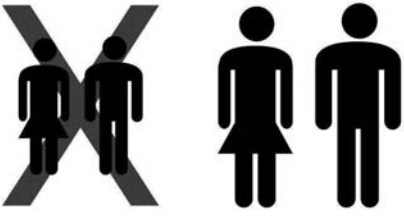

PUSH TROLLEY ON NARROW SIDE

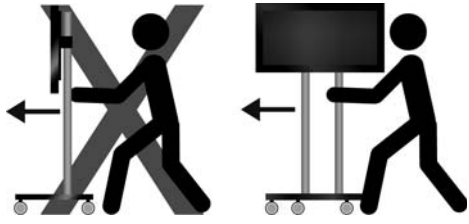

NEVER PULL TROLLEY.
ALWAYS PUSH

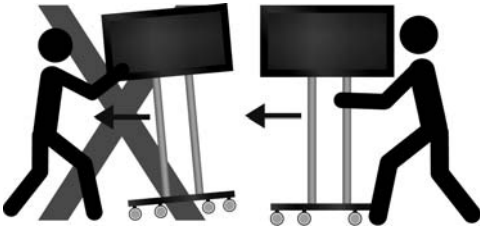

DO NOT PUSH AT TOP OF TROLLEY.
ALWAYS PUSH NEAR MIDDLE

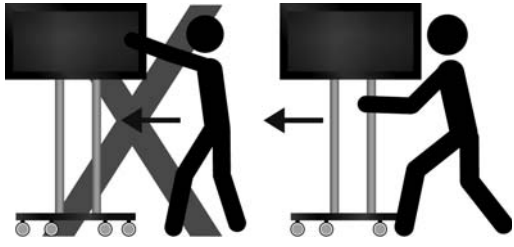

PRODUCT ASSEMBLY

There are two options for a fixed or mobile application of the base.

A) Select the leveling feet for fixed installation
B) Select the braked wheels for mobile application

1 A) Fix the levelling feet to the trolley.

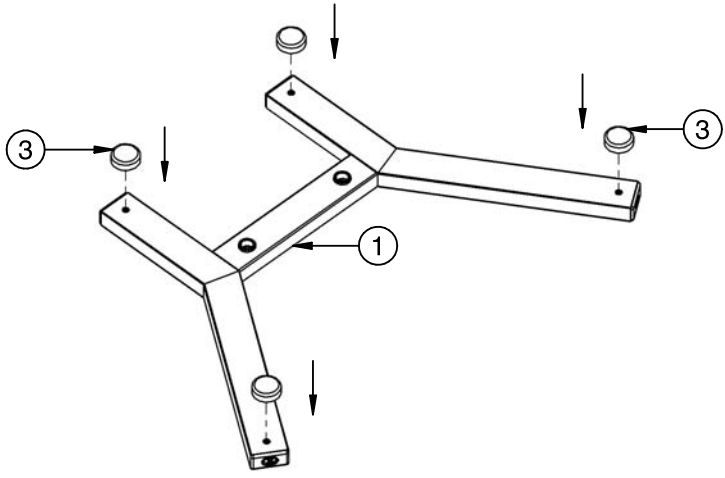

B) Screw the wheels to the trolley.

LOCK WHEELS PRIOR TO INSTALLATION



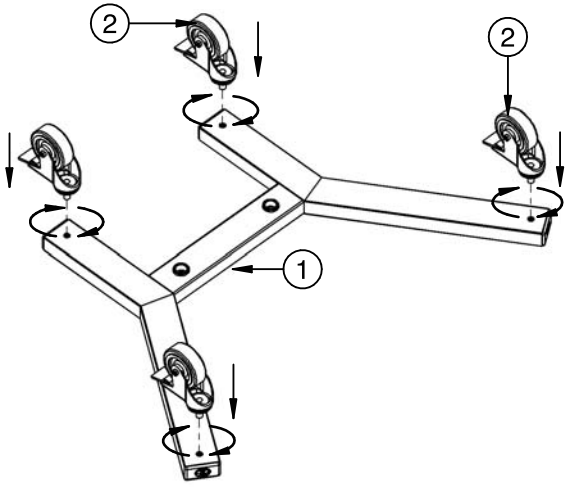

2 Attach the poles to the trolley base using parts 5.

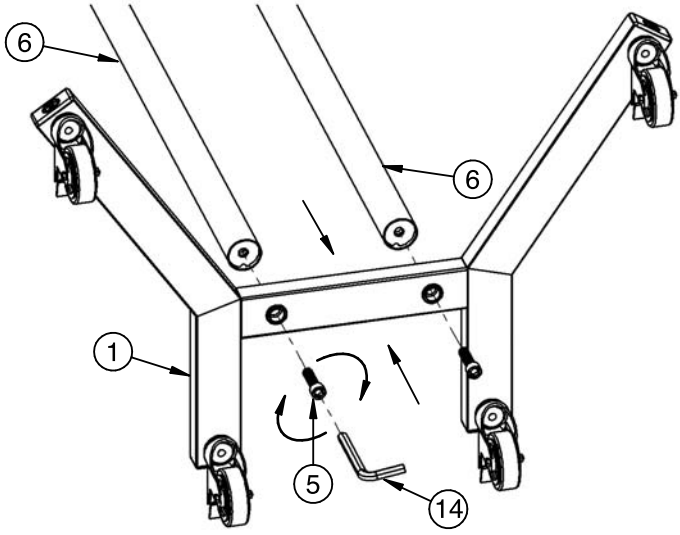

3 Slide the mounting plate with collars onto the pole.

Note: To avoid marking the poles, ensure all pre-fitted screws on collars are fully loosened before assembly.

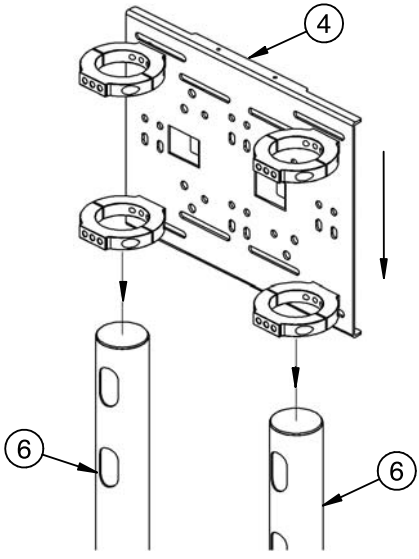

4 Fix at desired height by tightening pre-fitted screws on all collars.

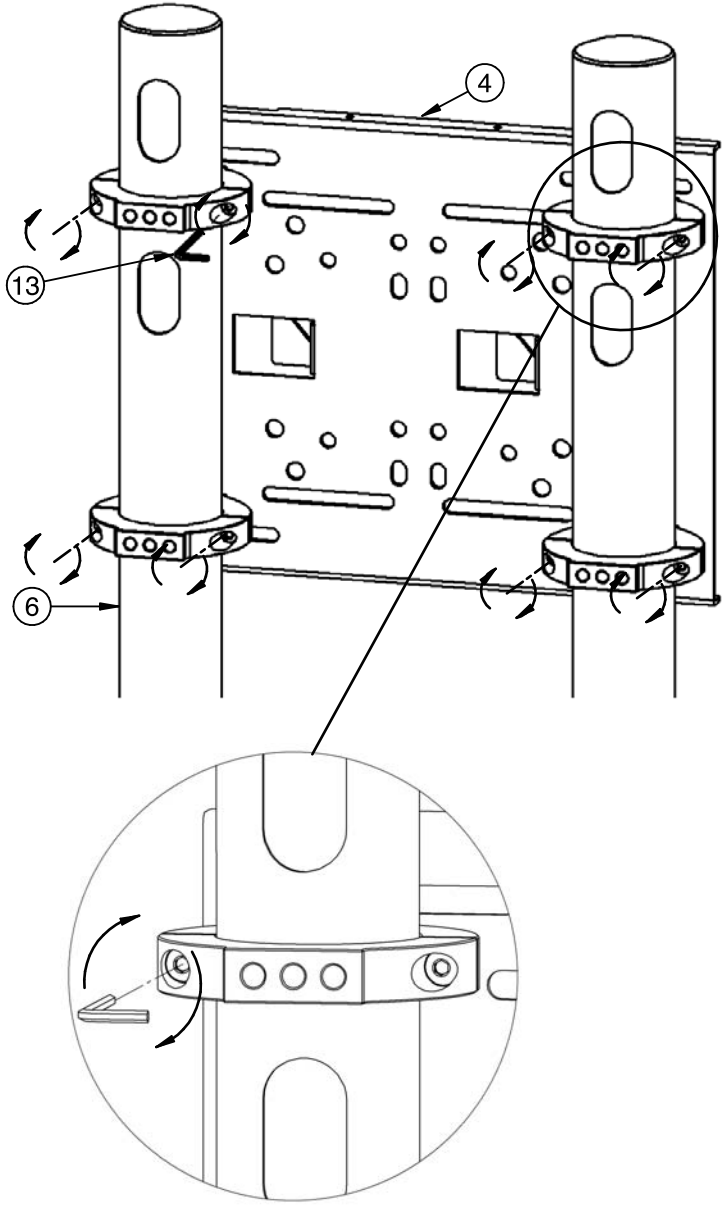

INSTALLATION INSTRUCTIONS

There are two methods of attaching the mount to the screen, depending on the screen fixing pattern.

A) VESA Fixings: 75 x 75mm, 100 x 100mm, 200 x 100mm or 200 x 200mm *(page 10)*

B) VESA Fixings: 300 x 200mm, 400 x 200mm, 300 x 300m, 400 x 300mm, 400 x 400mm or 600 x 400mm and non-VESA up to 755 x 410mm *(page 11)*

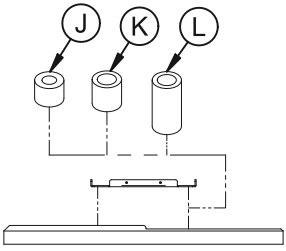

Use spacers on recess in flat screen and for extra space for cables.

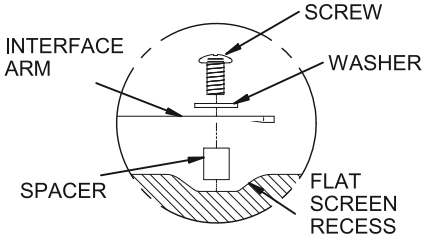

⚠ Please refer to screen manufacturer manual for guidance on screen mounting ⚠

A

For screens with a VESA patterns up to 200 x 200mm

i. Remove Interface Plate (Part 9) from Cross Rails (Part 10)

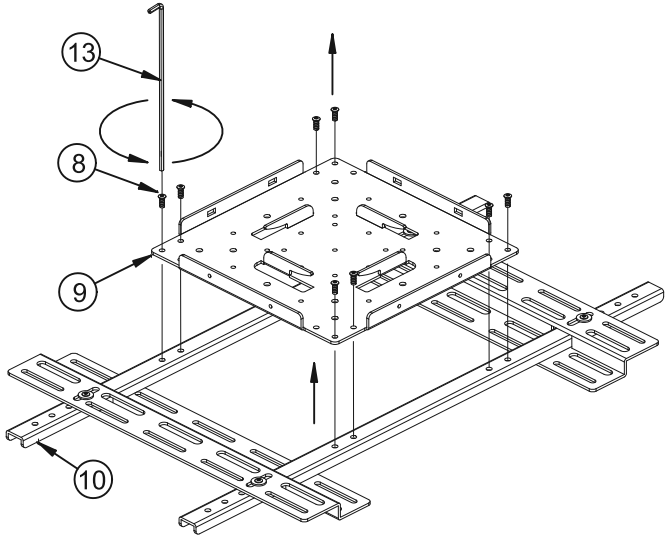

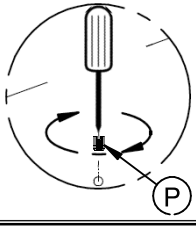

FOR SCREENS WITH M8 FIXINGS

Screw parts P into the flat screen fixing holes.

Continue with screen mounting steps on next page.

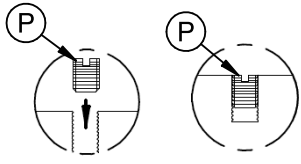

ii. Attach the Interface Plate (Part 9) to the flat screen.

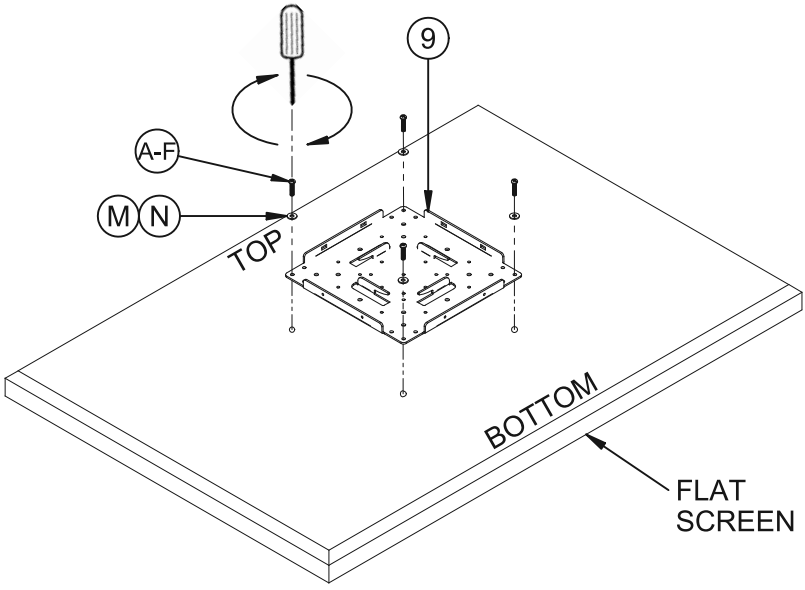

B

For screens with a VESA pattern from 300 x 200mm up to 600 x 400mm and non-VESA patterns

i. To adjust Interface Arms (Part 11) on Cross Rails (Part 10) remove the connecting screws and washers (Parts 8 and 12)*

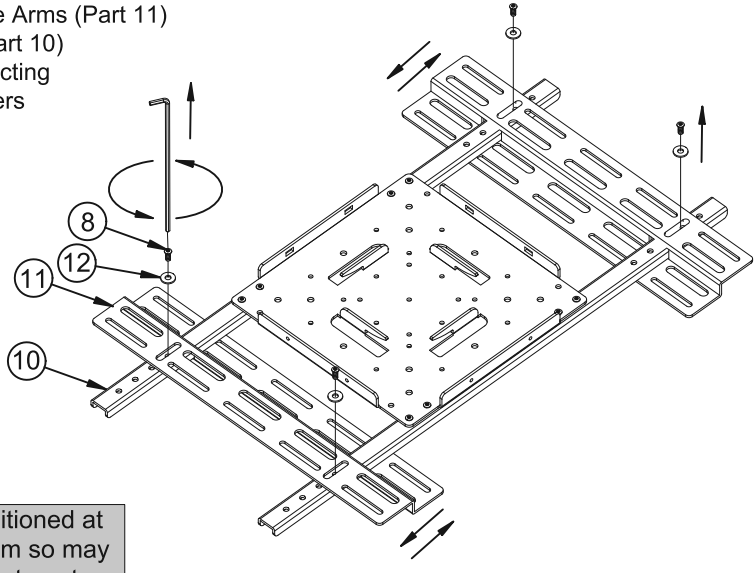

*Arms are pre-positioned at VESA 400 x 400mm so may not require adjustment.

Optional screen fixing

By removing interface arms (Part 11) from the cross rails (Part 10) the arms can be rotated 180º to match fixings on rear of screen.

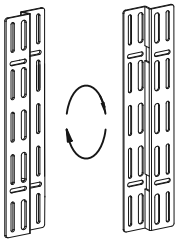

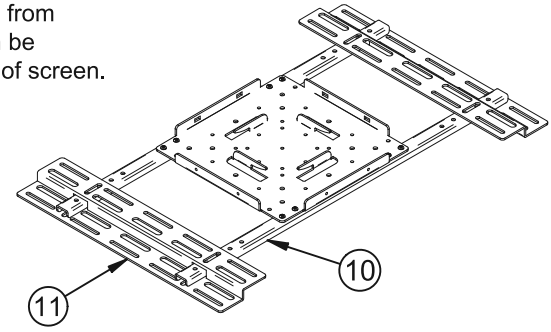

ii. Attach the Interface Arms (Part 11) to the flat screen.

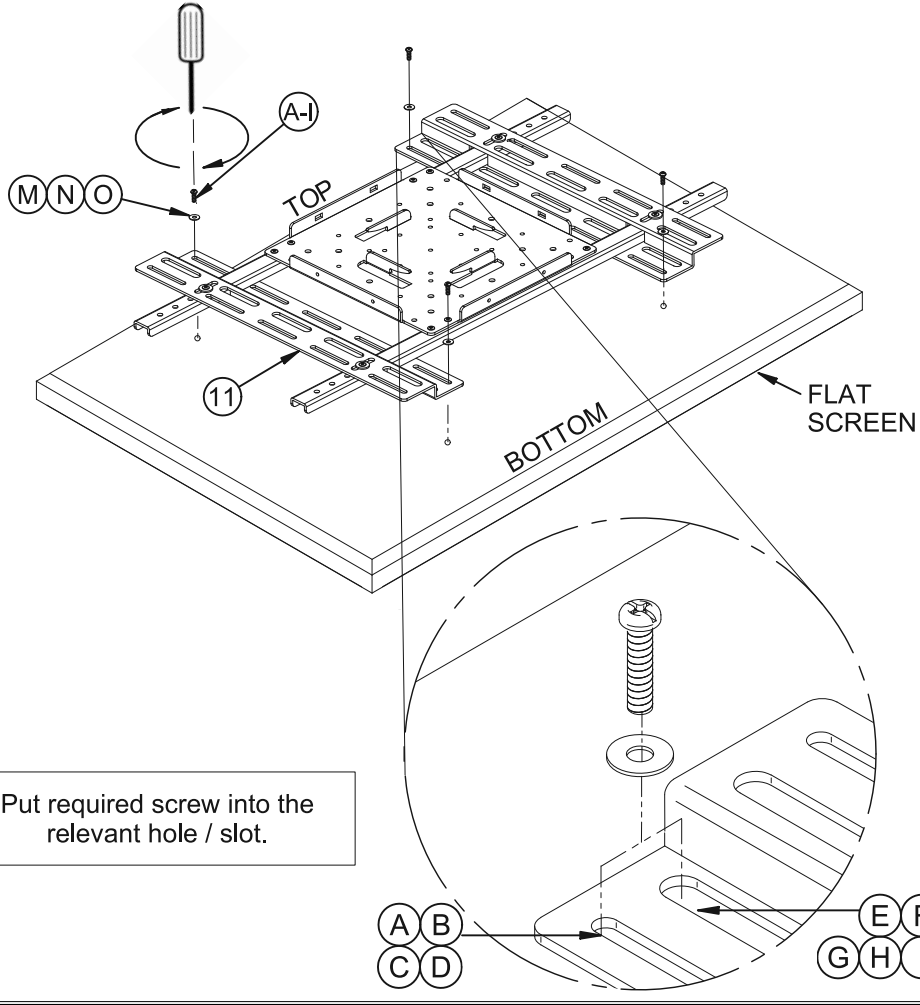

Put required screw into the relevant hole / slot.

iii. Fix the Cross Rails (Part 10) to the Interface Arms (Part 11).

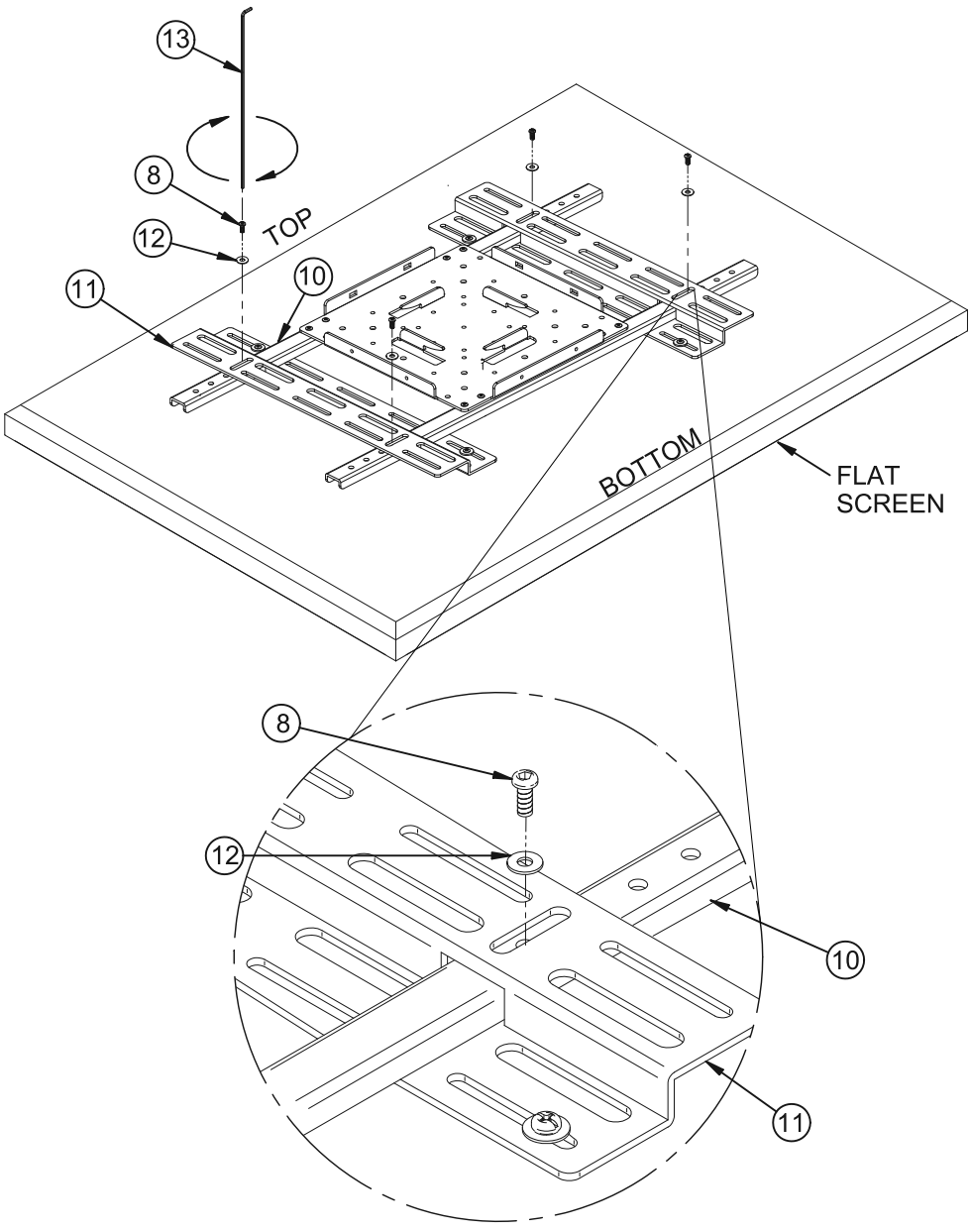

6 Attach flat screen in landscape or portrait format.

i. Hook on flat screen

⚠ WARNING: Lock wheels before hooking flat screen on. ⚠

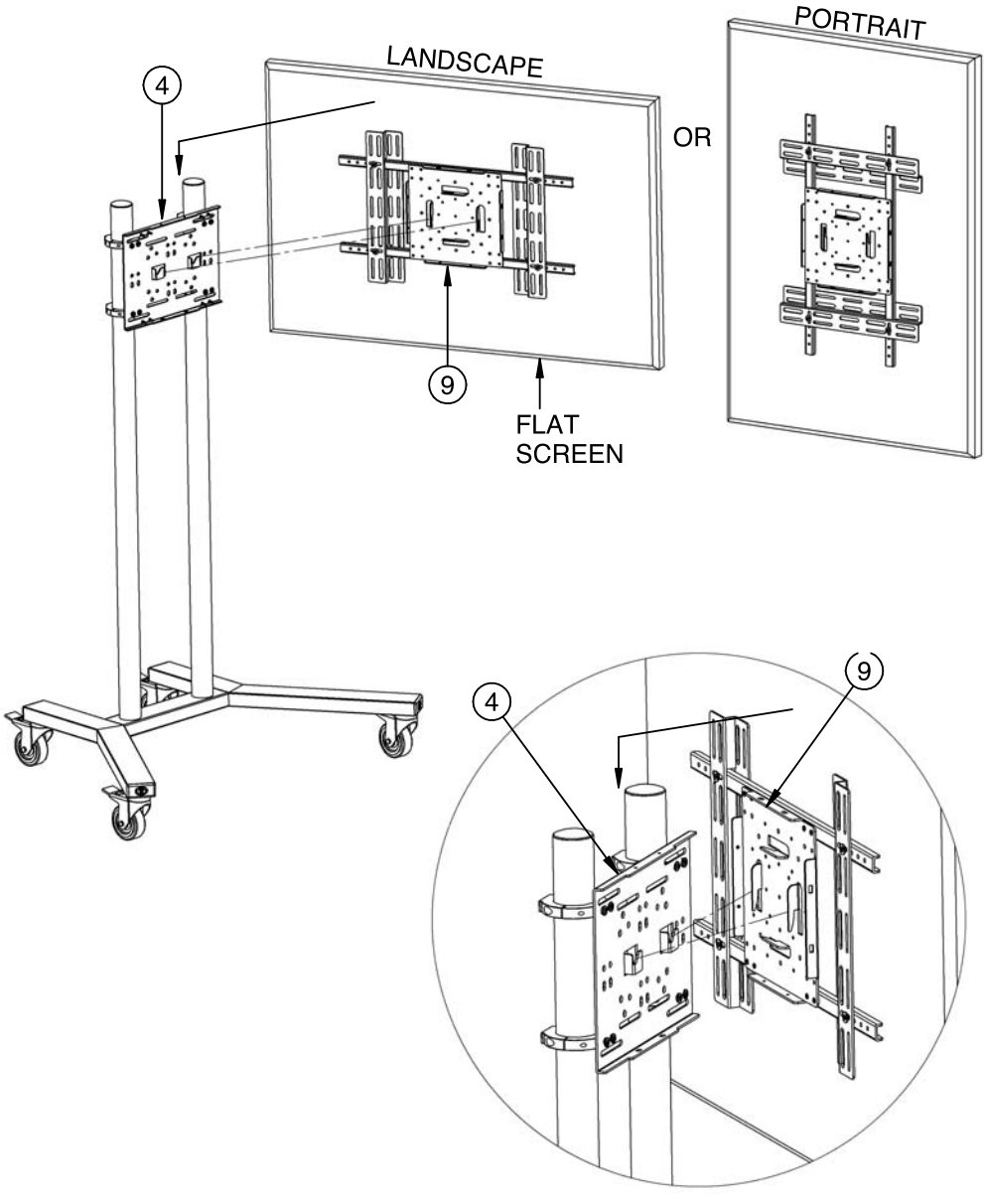

ii. Secure in place using parts 8 and 12.

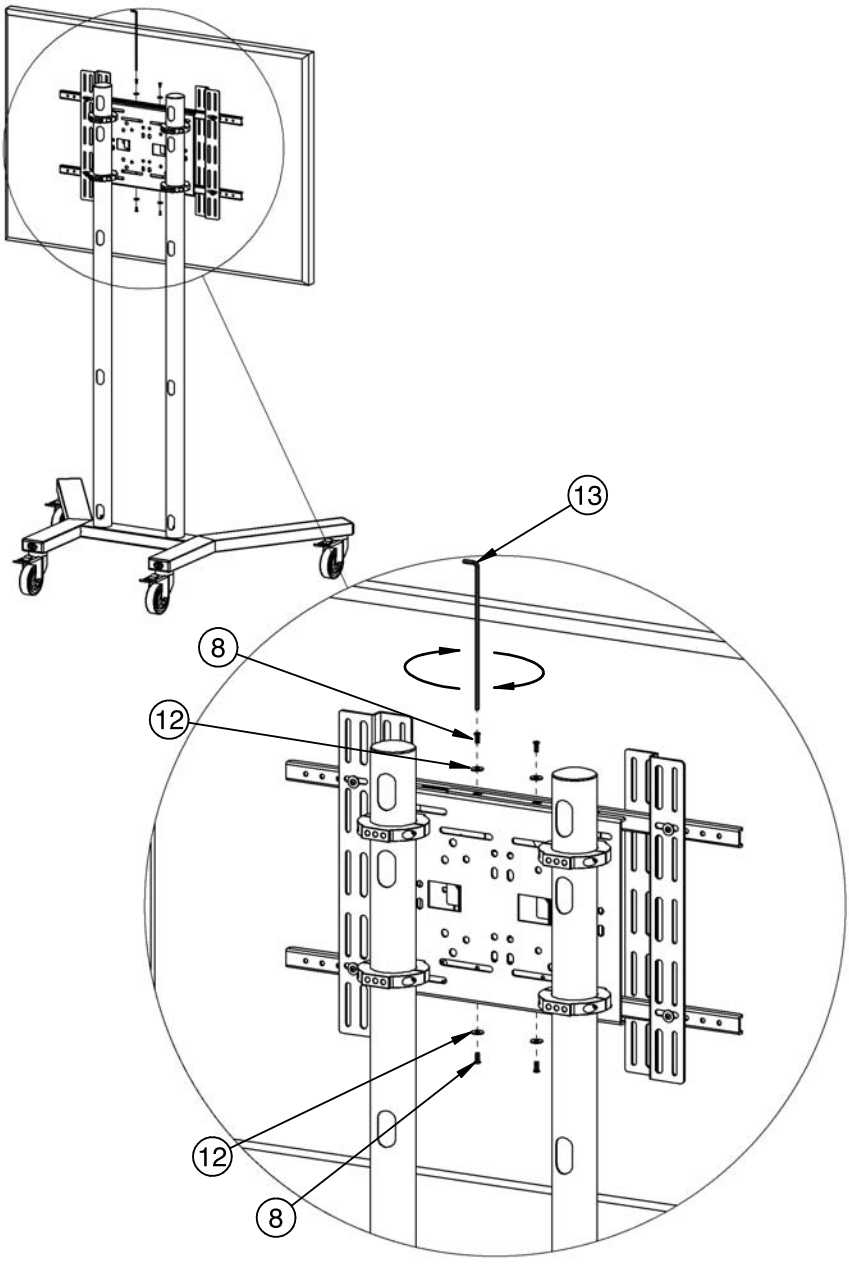

7 Attach parts 7 to trolley / stand.

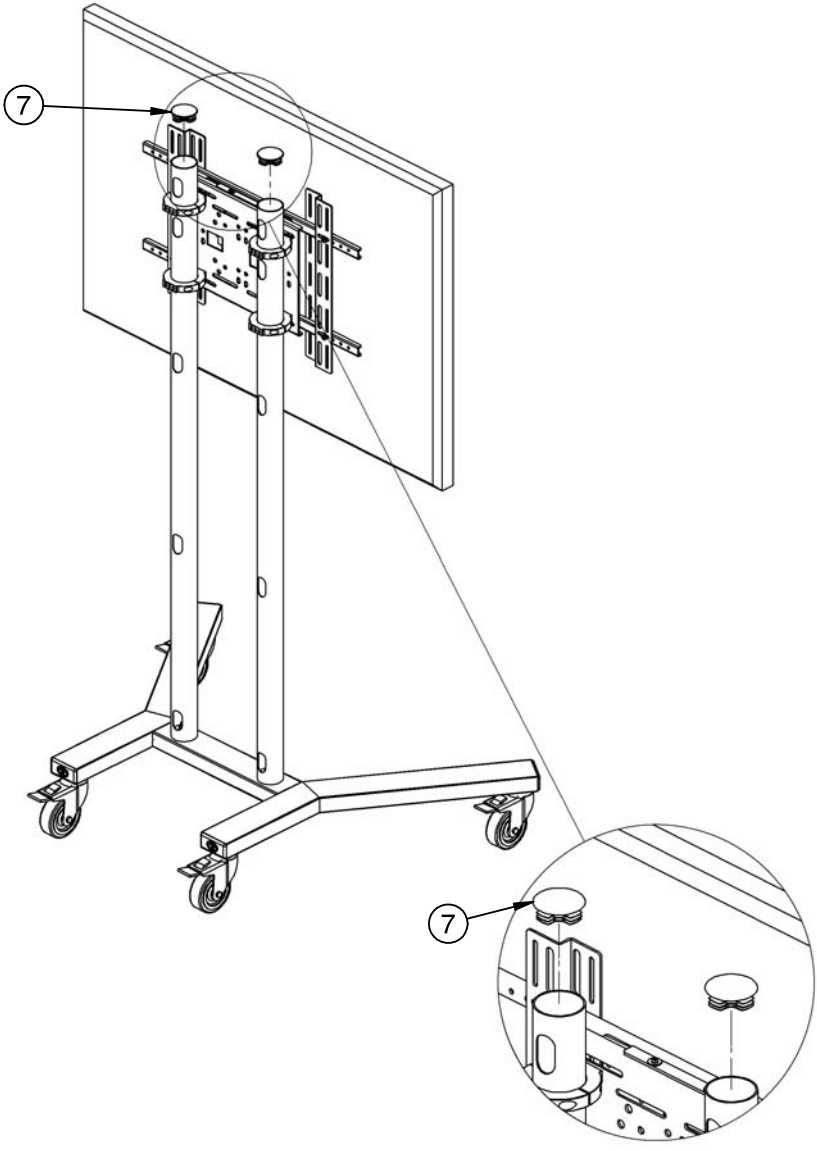

OPTIONAL ACCESSORIES

Twin pole VC camera shelf

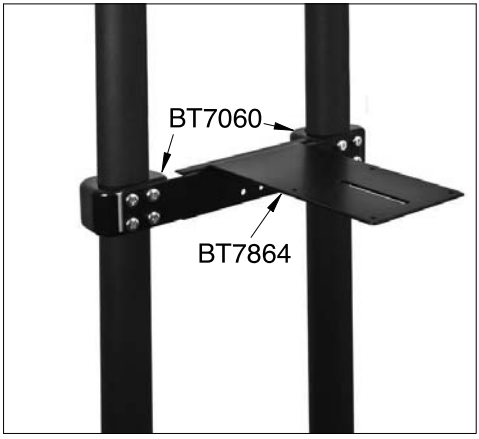

Audio video accessory shelf

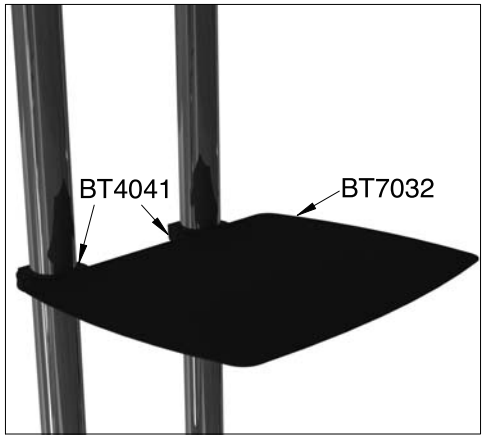

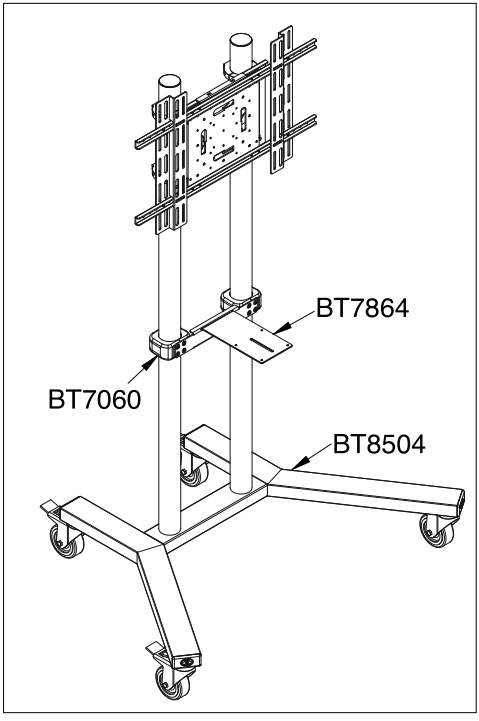

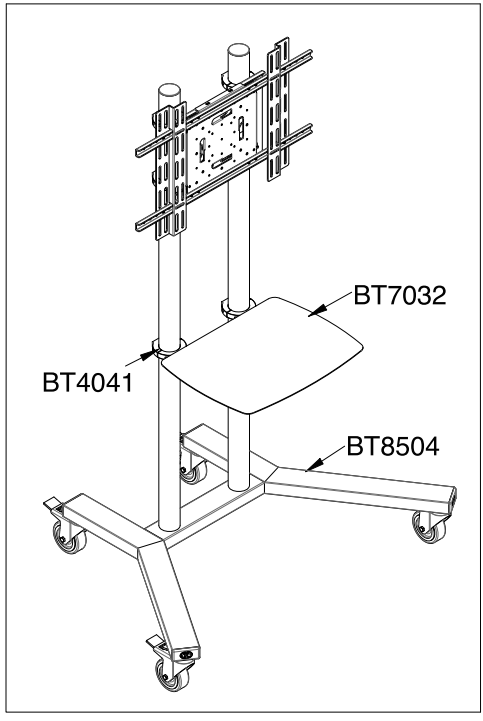

BT8504
PRODUCT DIMENSIONS

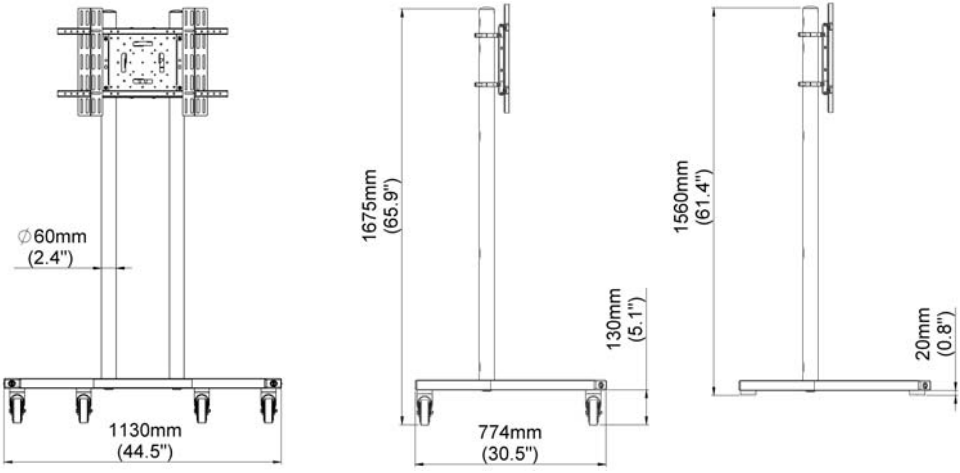

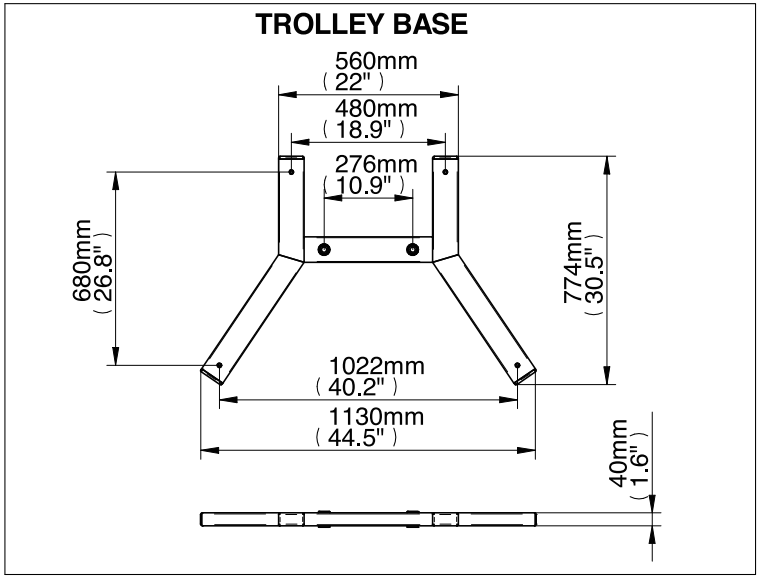

THESE INSTRUCTIONS ARE INTENDED AS A GUIDE ONLY AND B-TECH ACCEPTS NO LIABILITY FOR THE ACCURACY OF THE INFORMATION CONTAINED IN THIS DOCUMENT.

BT8504
PRODUCT DIMENSIONS

UNIVERSAL INTERFACE PLATE

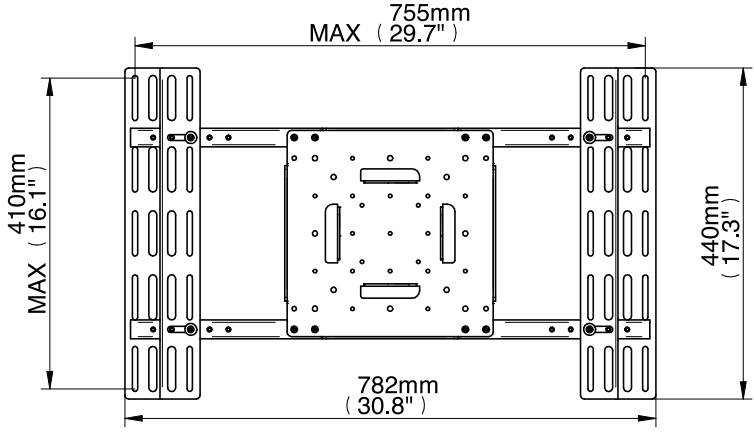

VESA INTERFACE PLATE

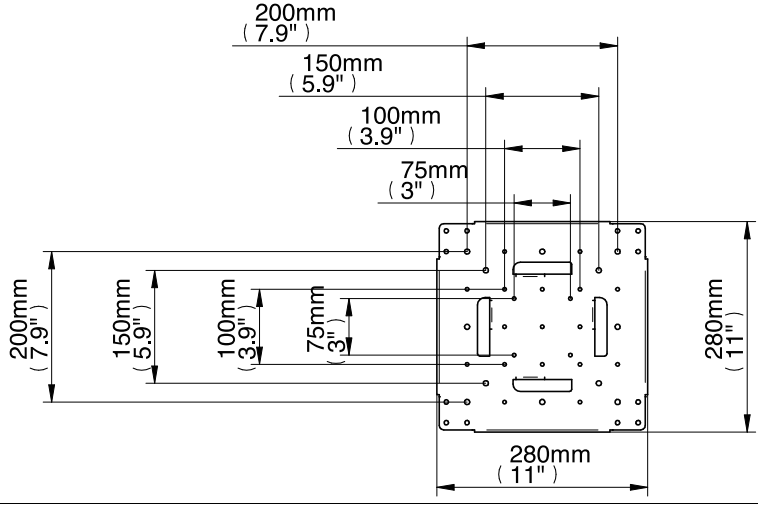

THESE INSTRUCTIONS ARE INTENDED AS A GUIDE ONLY AND B-TECH ACCEPTS NO LIABILITY FOR THE ACCURACY OF THE INFORMATION CONTAINED IN THIS DOCUMENT.

www.btechavmounts.com

UniKomp.pl
Nowe Technologie IT

adres 43-200 Pszczyna , ul. Piastowska 9
tel/fax (32) 210 22 11, 3263300, 2128822
e-mail biuro@unikomp.pl
internet www.unikomp.pl

B-TECH AUDIO VIDEO MOUNTS

HEAD OFFICE
B-Tech International Limited
Bennett House, Long March, Daventry, Northants., NN11 4NR, UK
Email: info@btechavmounts.com

©2014 B-Tech International Limited. All rights reserved.
B-Tech Audio Video Mounts is a division of B-Tech International Limited.
B-Tech & Better By Design are registered trademarks of B-Tech International Limited.
All other brands and product names are trademarks of their respective owners.
Photographs are for illustrative purposes only. E&OE.

AMA-BT8504-V2.1-PROBX-0314-44 MADE IN P.R.C.