B-TECH AV MOUNTS

AV AWARDS 2017
MANUFACTURER OF THE YEAR
WINNER

UniKomp.pl
Nowe Technologie IT

adres 43-200 Pszczyna , ul. Piastowska 9
tel/fax (32) 210 22 11, 3263300, 2128822
e-mail biuro@unikomp.pl
internet www.unikomp.pl

BT8504
LARGE FLAT SCREEN TROLLEY



Designed for large screens mounted in landscape or portrait style, the BT8504 is ideal for all professional applications. A simple 'hook-on' installation makes fitting a screen to the trolley quick and easy. Available in two colour options, the BT8504 also includes non-marking braked castors and optional adjustable levelling feet, to create either a portable or freestanding configuration.

SPECIFICATION	
Recommended screen size	up to 70"
Max load	70kg
VESA® fixings	up to 600 x 400
Universal fixings	up to 755 x 410mm
Dimensions (with castors)	W: 1130mm H: 1681mm D: 769mm
Colour (base)	Black
Colour (poles)	Black or Chrome

FEATURES

- Universal design suitable for screens in a landscape or portrait orientation
- Available in two colour options
- Security Allen key and screws provided
- Non-marking 4" locking / braked castors included
- Also supplied with optional screw in levelling feet to create a freestanding configuration
- Collar compatible accessories such as shelves *(available separately)* can be fitted directly to the poles
- Integrated cable management for a neat and tidy installation
- Simple 'hook-on' screen installation
- All mounting hardware included



POLES



Universal design suitable for screens in portrait or landscape orientation



Collar compatible accessories such as shelves (available separately) can be fitted directly to the poles



Non-marking 4" locking / braked castors included



Also supplied with optional screw in levelling feet to create a freestanding configuration

TECHNICAL DRAWINGS

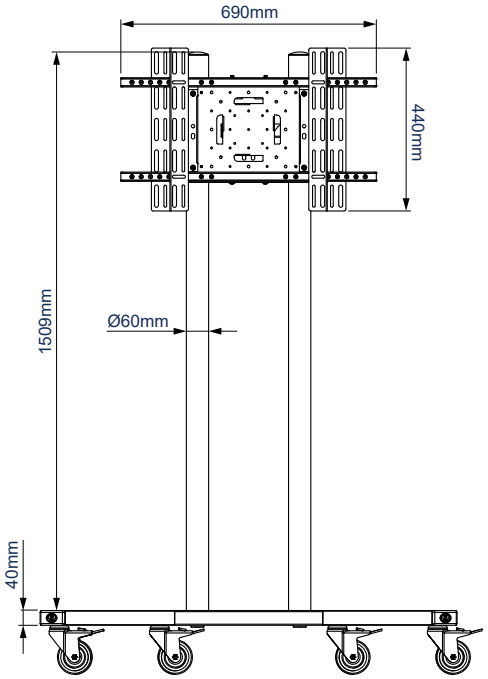

FRONT VIEW
WITH CASTORS

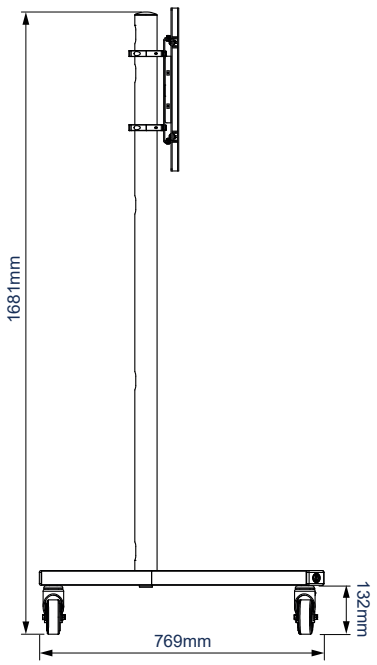

SIDE VIEW
WITH CASTORS

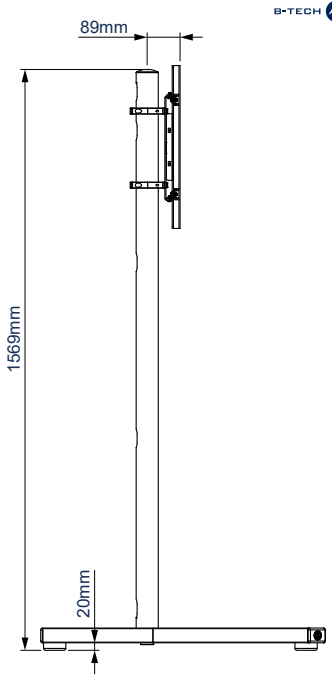

SIDE VIEW
WITH LEVELLING FEET

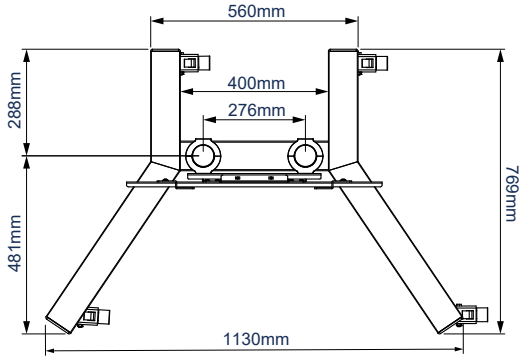

TROLLEY BASE

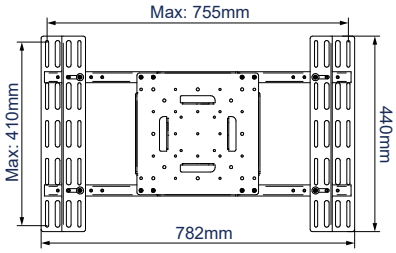

UNIVERSAL
INTERFACE PLATE

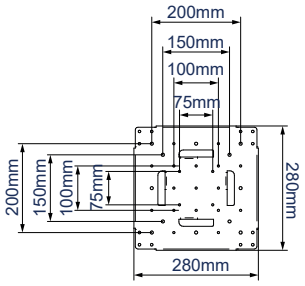

VESA
INTERFACE PLATE

PACKING INFORMATION

*PLEASE NOTE, THIS IS A **MULTI-BOX** ITEM*

COLOUR:	ORDER REF:	EAN CODE:	MASTER CARTON QTY:	INNER CARTON QTY:	MASTER CARTON WEIGHT:	MASTER CARTON CUBE:
Black Base & Black Poles	BT8504/BB	5019318085413	1	0	23.4kg / 9kg	0.075cbm / 0.014cbm
Black Base & Chrome Poles	BT8504/BC	5019318085406	1	0	23.4kg / 9kg	0.075cbm / 0.014cbm

ACCESSORIES AND RELATED PRODUCTS

BT7260



60mm Accessory Collar for fixing mounts and accessories to Ø60mm poles

BT7032



Large AV Accessory Shelf is ideal for adding AV accessories such as a Blu-Ray player or laptop to an installation

BT8508



Trolley for 84" Microsoft® Surface Hub and other interactive displays over 72"

BT8506



Extra-Large Flat Screen Display Trolley for screens up to 120"

© 2019 B-Tech International Design & Manufacturing Limited. All rights reserved.
The product images and specifications in this document are subject to variations at the time of print.
We reserve the right to change the technical or physical specification without prior notice. The B-Tech name and the B-Tech logo are registered trademarks of B-Tech International Design & Manufacturing Limited.
All other brands and products are trademarks of their respective owners. All B-Tech images and symbols are exclusive property of B-Tech International Design & Manufacturing Limited.
B-Tech International Design & Manufacturing Limited accepts no liability for any damages caused by the incorrect installation of any part of this specification sheet. It is strictly prohibited, unless prior written permission has been granted by B-Tech International Design & Manufacturing Limited, to: